**RADIO SERVICE BULLETIN**

*Issue: No. 72*
*Date of Issue: April, 1951*
*Subject: Model A5110*

# SPECIFICATION OF S.T.C. MODEL A5110

**CIRCUIT:** Five valve, Broadcast, A.C. operated superheterodyne, using converter, one stage of I.F. amplification, Detector-Audio stage, power output stage, and H.T. rectifier. A.V.C., variable tone control, power switch, pick-up socket.

**TUNING RANGE:**
530-1620 Kc/s.

**INTERMEDIATE FREQUENCY:**
455 Kc/s.

**VALVE COMPLEMENT:**
V1 Frequency Changer 6J8GA.
V2 I.F. Amplifier, 6U7G.
V3 Detector-Audio 6B8GT.
V4 Power Output 6V6GT.
V5 H.T. Rectifier 5Y3GT.

**POWER SUPPLY:**
200-240 Volts, 40-60 cycles A.C.
(240 M.A. with 240 Volts input).

**LOUD SPEAKER:**
9 x 6 inch oval.

**CIRCUIT VOLTAGES:**

| | Plate | Screen | Osc. Plate | Cathode | Heater |
|---|---|---|---|---|---|
| V1 | 225 | 100 | 100 | — | 6.2 |
| V2 | 225 | 90 | — | — | 6.2 |
| V3 | 55 | 20 | — | 1.4 | 6.2 |
| V4 | 205 | 225 | — | 10 | 6.2 |
| V5 | 255/255 | — | — | 265 | 4.8 |

These voltages must be measured to receiver earth with voltmeter having a resistance of at least 1000 ohms per volt (Tolerance ±5%). Volume control must be turned to maximum.

**MEASUREMENT SPECIFICATION:**
I.F. Sensitivity—V1 grid 15 microvolts.
I.F. Sensitivity—V2 grid 1.6 millivolts.
Broadcast Sensitivity 5 microvolts average.
These figures are related to an audio frequency output of 14 volts measured between plate of V4 and chassis through a series condenser of .1 MFD capacity.

**ALIGNMENT FREQUENCIES:**
1400 Kc/s and 600 Kc/s.

**CHECK POINTS:**
1000 Kc/s.

# MODEL A5110

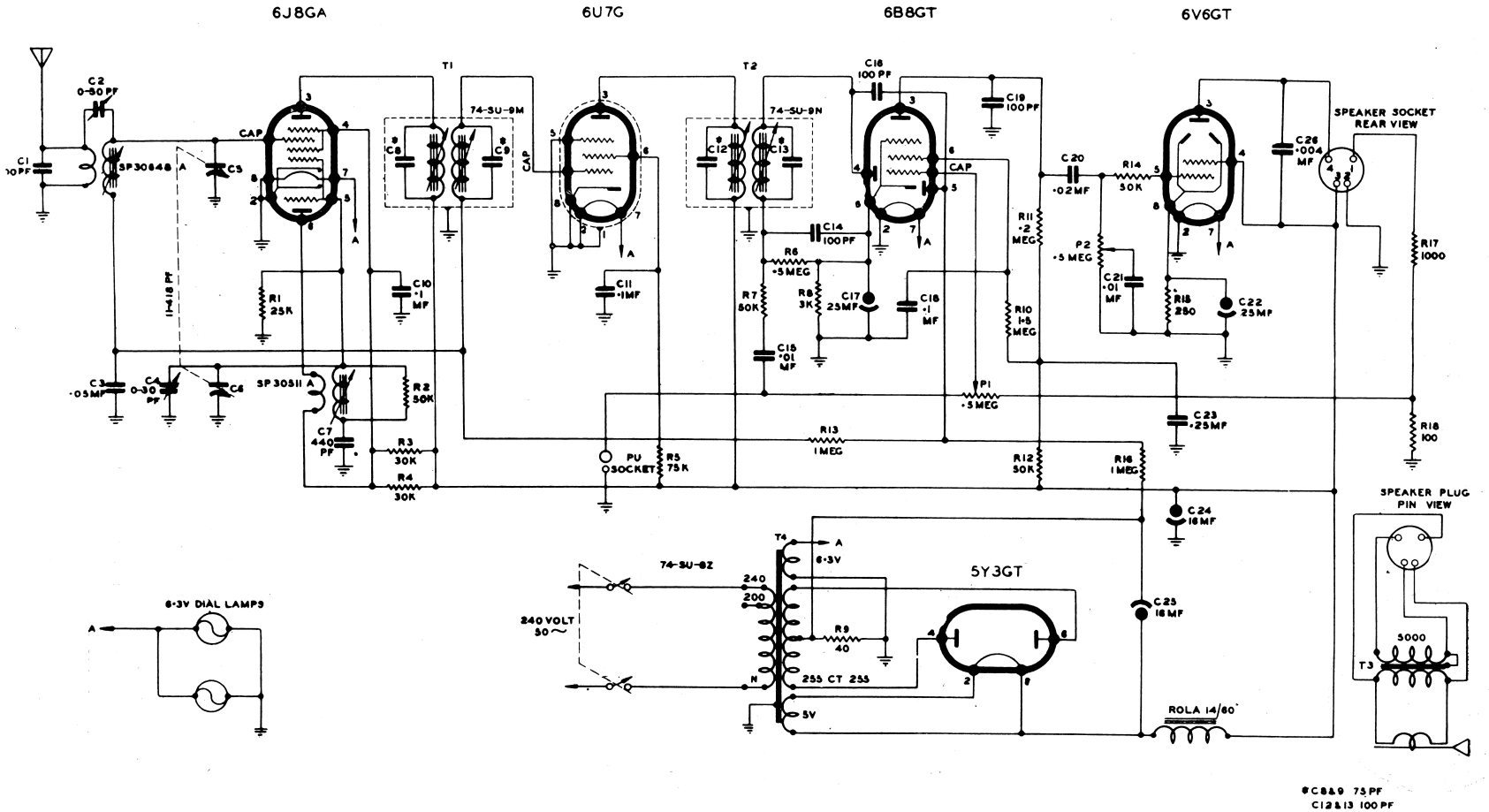
6J8GA
6U7G
6B8GT
6V6GT
T1
T2
T3
T4
74-SU-9M
74-SU-9N
74-SU-8Z
SP30648
SP30511
CAP
C1 10PF
C2 0-50PF
C3 ·05MF
C4 0-30 PF
C5
C6
C7 440 PF
C8
C9
C10 ·1 MF
C11 ·1MF
C12
C13
C14 100PF
C15 ·01 MF
C16 ·1 MF
C17 25MF
C18 100 PF
C19 100PF
C20 ·02MF
C21 ·01 MF
C22 25MF
C23 ·25MF
C24 16MF
C25 16MF
C26 ·004 MF
R1 25K
R2 50K
R3 30K
R4 30K
R5 75K
R6 ·5MEG
R7 50K
R8 3K
R9 40
R10 1·5 MEG
R11 ·2 MEG
R12 50K
R13 1MEG
R14 50K
R15 250
R16 1MEG
R17 1000
R18 100
P1 ·5MEG
P2 ·5 MEG
PU SOCKET
SPEAKER SOCKET REAR VIEW
SPEAKER PLUG PIN VIEW
6·3V DIAL LAMPS
240 VOLT 50~
240
200
N
255 CT 255
6·3V
5V
5Y3GT
ROLA 14/60
5000
A
*C8&9 75PF
C12&13 100PF